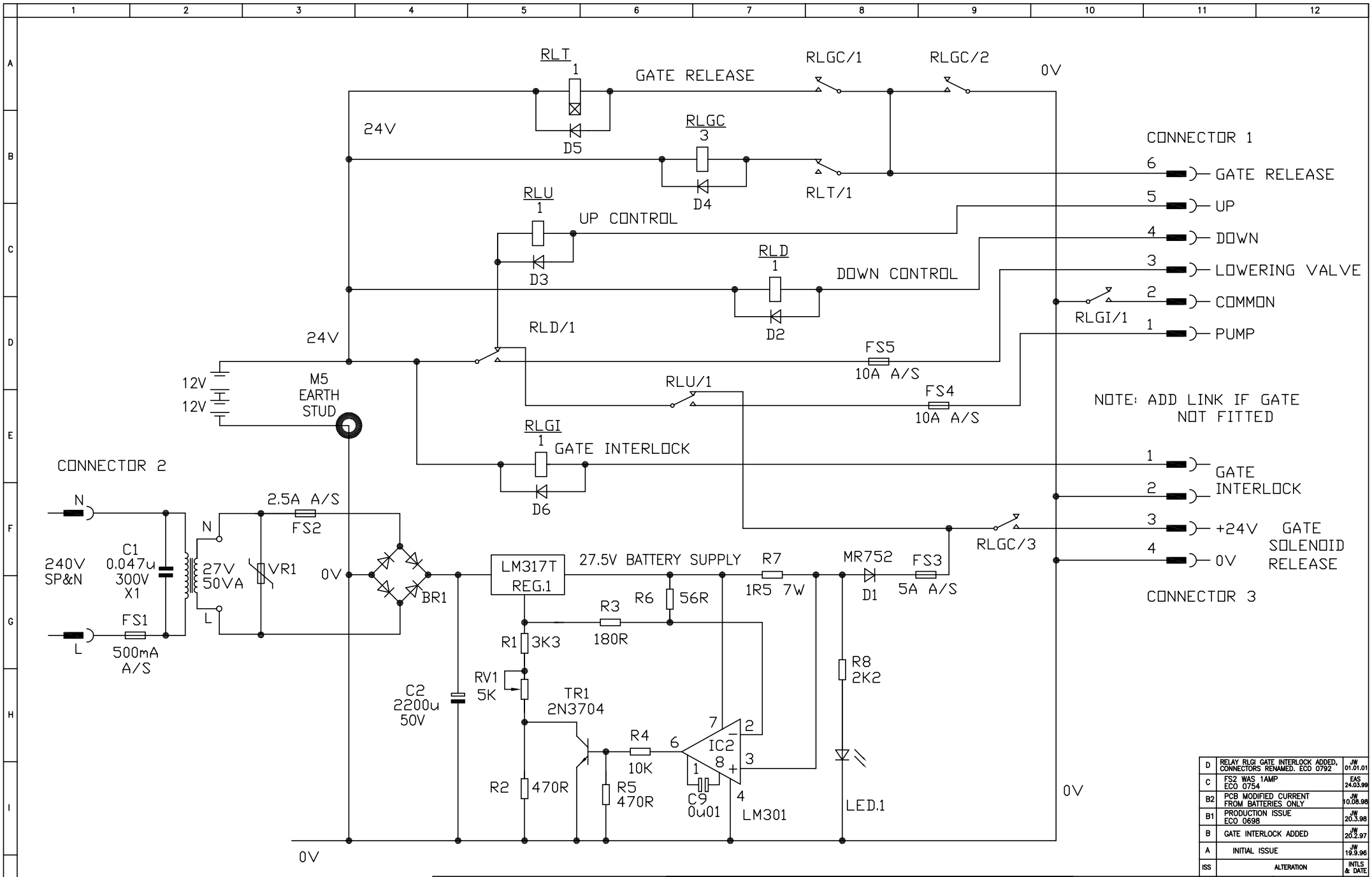

D	RELAY RLGI GATE INTERLOCK ADDED, CONNECTORS RENAMED. ECO 0792	JW 01.01.01
C	FS2 WAS 1AMP ECO 0754	EAS 24.03.99
B2	PCB MODIFIED CURRENT FROM BATTERIES ONLY	JW 10.08.98
B1	PRODUCTION ISSUE ECO 0698	JW 20.3.98
B	GATE INTERLOCK ADDED	JW 20.2.97
A	INITIAL ISSUE	JW 19.9.96
ISS	ALTERATION	INTLS & DATE

Wessex ©
WESSEX MEDICAL EQUIP. CO. LTD
BUDDS LANE , ROMSEY,
HAMPSHIRE. SO51 0HA

THIS DRAWING IS THE PROPERTY OF WESSEX MEDICAL EQUIP. CO. LTD. AND MAY NOT BE PUBLISHED, REPRODUCED OR USED FOR MANUFACTURE WITHOUT THE EXPRESS PERMISSION OF THE OWNERS IN WRITING

SCALE	
DRN J.W	DATE 14.1.97
CHKD	DATE
APPD	DATE

THIS DRAWING TO BE READ IN CONJUNCTION WITH DRG. No.S

SP SCHEMATIC WIRING DIA SP01 8001

PCB EC15 0028

DESCRIPTION

STEPLIFT CIRCUIT DIAGRAM

DRAWING No.

SP01 8101 CCT

SHEET 1 OF 1 SHTS